PJHM Architects, Inc.
24461 Ridge Route Dr., #100
Laguna Hills, CA 92653

JSD
1219 Whispering Wind Dr.
Tracy, CA 95377

CORRAL HOLLOW ELEMENTARY SCHOOL
JEFFERSON SCHOOL DISTRICT
DSA Application: A#02-118369 / FILE 39-39

CHANGE ORDER NO. #01

TO: BHM Construction, Inc.
221 Gateway Road W, Suite 405
Napa, CA 94558

You are authorized to make the following changes to your construction contract when this change order has been approved by the undersigned parties:

ITEM No. 1: CPE 01: Credit to eliminate 4" concrete encasement per detail 3/C2.0 and per RFI 13 at 54 storm and sewer cleanout locations.

Reason: Value Engineering

Requested by: Contractor

Change in Contract Sum: ($7,345.00) /CREDIT

Time Extension: 0 Calendar Days

ITEM No. 2: CPE 02: Credit to eliminate 12 domestic water shut off valves shown in the civil drawings per RFI 18.

Reason: Value Engineering

Requested by: Contractor

Change in Contract Sum: ($7,777.00) /CREDIT

Time Extension: 0 Calendar Days

ITEM No. 3: CPE 03: Per CCD 02 additional cost to furnish and install (2) additional Simpson HD19 hold downs per SSK-1.

Reason: Clarification to drawings

Requested by: Design team

Change in Contract Sum: $703.00 /ADD

Time Extension: 0 Calendar Days

Original Contract Sum	$	50,950,800.00
This Change Order No.1		($14,419.00)
Previous Change Orders		$0.00
Revised Contract Amount:	$	50,936,381.00

The cumulative adjustment of the Contract Price and the Contract Time for each Change included in this Change Order represents and reflects the entire adjustment of the Contract Price and the Contract Time due Contractor for such items of Changes. The Contract Price adjustment herein for the items included in this Change Order includes without limitation, all costs for labor, materials, services and/or equipment as well as any and all costs arising out of or associated in any manner with impacts, disruptions, interference, delays or hindrances in performing or providing the Changes included in this Change Order. By executing this Change Order, Contractor acknowledges the foregoing and agrees that any rights or claims of Contractor, whether known or unknown, for costs or time associated with providing or performing the Changes included in this Change Order and not specifically reflected and included in this Change Order are waived, relinquished and released by Contractor; in connection with the foregoing, Contractor waives and releases any rights under Civil Code Section 1542 with regard to any unknown costs or additional time associated with the Changes included in this Change Order.

APPROVALS

Jefferson School District
DISTRICT

DATE

PJHM Architects, Inc.
ARCHITECT

DATE

BHM Construction, Inc.
CONTRACTOR

DATE

BHM CONSTRUCTION, INC.

221 Gateway Road W., Ste. 405, Napa, CA 94558 PHONE: (707) 643-4580 FAX: (707) 643-4581

CHANGE PROPOSAL ESTIMATE

TO: PJHM Architects
24461 Ridge Route Drive
Laguna Hills, CA 92653

ATTN: **Jacob Schmautz**

CPE # 001

DATE: Sep 20 2022
PROJECT: Corral Hollow ES
JOB # 219

We submit for your approval the following cost estimate of changes in work as follows:
Credit to eliminate 4" concrete encasement per detail 3/C2.0 and outlined in Request for Information #13 at 54 storm and sewer cleanout locations.

This change was requested by: RFI 13

ITEM	ENCL. #	LABOR	MTL/EQUIP	SUBS	TOTAL
BHM CONSTRUCTION		$0.00	$0.00		$0.00
WALLER INC.	PCO 2			($7,345.00)	($7,345.00)
					$0.00
					$0.00
					$0.00
					$0.00
					$0.00
					$0.00
					$0.00
					$0.00
					$0.00
					$0.00
					$0.00
		$0.00	$0.00	($7,345.00)	($7,345.00)
MARK-UP ON LABOR	10 %	$0.00			$0.00
				SUBTOTAL	($7,345.00)
MARK-UP ON MATERIAL & EQUIP.	10 %	$0.00			$0.00
				SUBTOTAL	($7,345.00)
MARK-UP ON SUBCONTRACTORS	5 %	$0.00			$0.00
				SUBTOTAL	($7,345.00)
ADDITIONAL BOND PREMIUM @	1 %				$0.00
					($7,345.00)
TOTAL AMOUNT FOR CHANGE PROPOSAL					($7,345)
TIME EXTENSION REQUIRED FOR THIS CHANGE					0
					(WORKING DAYS)

☐ We have proceeded with this change, and work orders have been sent to the subcontractors, in accordance with

☐ We will not proceed with this change until receipt of a signed copy of this proposal. This proposal must be accepted by ASAP in order to avoid additional time extension and/or expense.

APPROVED: _____ BHM CONSTRUCTION

DATE: _____ BY: _____

CPE #001- BHM Cost Breakdown

CREDIT TO ELIMINATE 4" CONCRETE ENCASEMENT AT CLEANOUTS

LABOR

ITEM	QUANTITY	UNITS	DESCRIPTION	$/UNIT	COSTS
					0.00
					0.00
					0.00
					0.00
					0.00
					0.00
					0.00
					0.00
					0.00
					0.00
					0.00
					0.00
					0.00
					0.00

MATERIALS

ITEM	QUANTITY	UNITS	DESCRIPTION	$/UNIT	COSTS
					0.00
					0.00
					0.00
					0.00
					0.00
					0.00
					0.00

EQUIPMENT

ITEM	QUANTITY	UNITS	DESCRIPTION	$/UNIT	COSTS
					$0.00
					$0.00
					$0.00
					$0.00
					$0.00
					$0.00
					$0.00
					$0.00

WALLER, INC.

CA CL #879648
2229 Trinity Drive
Brentwood, CA 94513
Mike.WallerInc@comcast.net

Contact: Mike Waller
Phone: 925-634-3663
Fax: 925-634-3684
Cell: 925-382-9762

Proposal Date: 9/19/2022

Union: Yes
Bond: Excluded
Sales Tax: Included
Bid Date: 9/19/2022

Quote For: Corral Hollow Elementary School, Tracy, CA

Quote To: Nate Palmer
BHM Construction

Phone: 707.643.4580
Cell: 415.361.7550
Email: Nate Palmer
<natep@bhmconstruction.com>

Scope: PCO#2: CREDIT FOR CONCRETE AT BASE OF SD/SS CO's, per RFI #013

			Labor	Matl.'s	Equip	Subs	M.U. 5%	Totals
CREDIT 4" SSCO, CONCRETE AT BASE	-15	EA	$(1,131)	$ (591)	$ (113)		$ (92)	$(1,927)
CREDIT 4" SDCO, CONCRETE AT BASE	-9	EA	$ (679)	$ (377)	$ (68)		$ (56)	$(1,180)
CREDIT 6" SDCO, CONCRETE AT BASE	-8	EA	$ (603)	$ (386)	$ (60)		$ (52)	$(1,101)
CREDIT 8" SDCO, CONCRETE AT BASE	-4	EA	$ (302)	$ (212)	$ (30)		$ (27)	$ (571)
CREDIT 10" SDCO, CONCRETE AT BASE	-11	EA	$ (830)	$ (581)	$ (83)		$ (75)	$(1,569)
CREDIT 12" SDCO, CONCRETE AT BASE	-7	EA	$ (528)	$ (368)	$ (53)		$ (47)	$ (996)
SUBTOTAL, ADDS			$(4,073)	$(2,515)	$ (407)	$ -	$ (350)	$(7,345)
TOTAL PRICE FOR THIS PROPOSAL								$(7,345)

Notes:

1.

Inclusions:

1. All inclusions and exclusions per our base subcontract.
2. **Credit to eliminate the concrete around the base of the Storm Drain/Sewer Cleanout on detail 3/C-2.0, per RFI #018.**

Exclusions:

1.

Waller, Inc.

Michael G. Waller

Michael G. Waller, Vice President

Activity Unit Price Summary

Biditem Activity	Description	Quantity	Unit	Calendar WC	Hrs/Shift	Labor	Perm Material	Constr Matl/Exp	Equip-Ment	Sub-Contract	Total
*** 7250	**PCO #2: 4" SSCO CONCRETE AT BASE**	Takeoff:					-15.00 EA		Bid:		-15.00 EA
2010	***CONCRETE AT BASE OF***	-15.00	EA	6308-1	8.00	-1,131	-559	-32	-113		-1,835
Mh: -15.00	Shifts: -0.9	Mh/Un: 1.0000		Un/Sh:	16.0017	75.42	37.24	2.17	7.50		122.32
##########NonAdditive Item		**7250**	**##########**			-1,131	-559	-32	-113		-1,835
Mh: -15.00	Mh/Un: 1.0000					75.42	37.24	2.17	7.50		122.32
*** 7252	**PCO #2: 4" SDCO CONCRETE AT BASE**	Takeoff:					-9.00 EA		Bid:		-9.00 EA
2010	***CONCRETE AT BASE OF***	-9.00	EA	6308-1	8.00	-679	-338	-39	-68		-1,123
Mh: -9.00	Shifts: -0.6	Mh/Un: 1.0000		Un/Sh:	16.0028	75.42	37.53	4.33	7.50		124.78
##########NonAdditive Item		**7252**	**##########**			-679	-338	-39	-68		-1,123
Mh: -9.00	Mh/Un: 1.0000					75.42	37.53	4.33	7.50		124.78
*** 7254	**PCO #2: 6" SDCO CONCRETE AT BASE**	Takeoff:					-8.00 EA		Bid:		-8.00 EA
2010	***CONCRETE AT BASE OF***	-8.00	EA	6308-1	8.00	-603	-351	-35	-60		-1,049
Mh: -8.00	Shifts: -0.5	Mh/Un: 1.0000		Un/Sh:	16.0032	75.42	43.84	4.33	7.50		131.09
##########NonAdditive Item		**7254**	**##########**			-603	-351	-35	-60		-1,049
Mh: -8.00	Mh/Un: 1.0000					75.42	43.84	4.33	7.50		131.09
*** 7256	**PCO #2: 8" SDCO CONCRETE AT BASE**	Takeoff:					-4.00 EA		Bid:		-4.00 EA
2010	***CONCRETE AT BASE OF***	-4.00	EA	6308-1	8.00	-302	-195	-17	-30		-544
Mh: -4.00	Shifts: -0.2	Mh/Un: 1.0000		Un/Sh:	16.0064	75.42	48.71	4.33	7.50		135.96
##########NonAdditive Item		**7256**	**##########**			-302	-195	-17	-30		-544
Mh: -4.00	Mh/Un: 1.0000					75.42	48.71	4.33	7.50		135.96
*** 7258	**PCO #2: 10" SDCO CONCRETE AT BASE**	Takeoff:					-11.00 EA		Bid:		-11.00 EA
2010	***CONCRETE AT BASE OF***	-11.00	EA	6308-1	8.00	-830	-533	-48	-83		-1,492
Mh: -11.00	Shifts: -0.7	Mh/Un: 1.0000		Un/Sh:	16.0023	75.42	48.42	4.33	7.50		135.67
##########NonAdditive Item		**7258**	**##########**			-830	-533	-48	-83		-1,492
Mh: -11.00	Mh/Un: 1.0000					75.42	48.42	4.33	7.50		135.67
*** 7260	**PCO #2: 12" SDCO CONCRETE AT BASE**	Takeoff:					-7.00 EA		Bid:		-7.00 EA
2010	***CONCRETE AT BASE OF***	-7.00	EA	6308-1	8.00	-528	-338	-30	-53		-948
Mh: -7.00	Shifts: -0.4	Mh/Un: 1.0000		Un/Sh:	16.0037	75.42	48.25	4.33	7.50		135.50
##########NonAdditive Item		**7260**	**##########**			-528	-338	-30	-53		-948
Mh: -7.00	Mh/Un: 1.0000					75.42	48.25	4.33	7.50		135.50
Mh: -54.00	*****REPORT TOTALS*****					**-4,073**	**-2,312**	**-201**	**-405**		**-6,991**

Activity Description indicates non-additve activity
N = Activity not adjusted to bid quantity

BHM Construction, Inc.
221 Gateway Road W, Suite 405
Napa, California 94558
P: 7076434580
F: 7076434581

Project: 219 219 - Corral Hollow Elementary School
7000 Coriander Street
Tracy, California 95377

RFI #13: Storm and Sewer Cleanout Clarification

Status	Open		
To	Allie Fitzgerald (PJHM)	**From**	Jack Doyle (BHM Construction, Inc.) 221 Gate Way Rd W, Ste 405 Napa, California 94558
Date Initiated	Sep 8, 2022	**Due Date**	Sep 13, 2022
Location		**Project Stage**	
Cost Impact		**Schedule Impact**	
Spec Section		**Cost Code**	
Drawing Number		**Reference**	
Linked Drawings			
Received From	Nate Palmer (BHM Construction, Inc.)		
Copies To	Tim Boczanowski (TMD Construction Services), Kyle Braunschweig (BHM Construction, Inc.), Jack Doyle (BHM Construction, Inc.), Allie Fitzgerald (PJHM), Kevin Kaiser (PJHM), Nate Palmer (BHM Construction, Inc.), Jacob Schmautz (PJHM)		

Activity

Question

Question from Jack Doyle BHM Construction, Inc. *on Thursday, Sep 8, 2022 at 03:17 PM PDT*

Reference detail 3/C-2.0

At storm drain installations, please confirm it is acceptable install an 8” riser on 10” and 12” SD lines with a G-5 Traffic rated box with bolt down cover marked “Storm”. This is a typical installation for DSA projects. Thank you.

This detail also shows concrete cover over the wye and 45 vertical riser. These low pressure fittings are not meant to be cast in concrete and may make future maintenance more difficult. Is it acceptable to eliminate the concrete around the lower wye and 45 vertical riser?

Attachments
RFI 012 - Storm and Sewer Cleanout Clarification.pdf

Awaiting an Official Response

BHM Construction, Inc.
Lic. 900404

RFI#	12
Date Submitted:	9/8/2022
Priority	Hot

Corral Hollow ES

Architect	Owner
PJHM	Jefferson School District
24461 Ridge Rte Dr	1219 Whispering Wind Drive
Laguna Hills, CA , 92653	Tracy, CA 95377
(949) 496-6191	650.625.6589

General Contractor	Subcontractor:
BHM Construction	BHM Construction
221 Gateway Rd W, Ste. 405	
Napa, CA 94558	
707.643.4580	

Subject:	Storm and Sewer Cleanout Clarification
Specification Section:	
Plan/Detail Sheet:	3/C-2.0
Attachments:	
Reference:	
Cost Impact:	

Question:

Reference detail 5/C-2.0

In lieu of the valve can shown in detail 5/C-2.0, BHM would like to propose installation of a PVC riser in a G-5 Christy traffic rated box with bolt down cover marked "Water". Please confirm this is acceptable.

This detail also shows concrete cover over the wye and 45 vertical riser. These low pressure fittings are not meant to be cast in concrete and may make future maintenance more difficult. Is it acceptable to eliminate the concrete around the lower wye and 45 vertical riser?

Response:

Yes, provided there is a credit provided for the concrete encasement. Any cleanouts broken during construction shall be repaired prior to turnover of project.

Steve Ray, SLR 9/8/22

PJHM Supplemental response: provide credit for review prior to proceeding with the installation. If credit is not agreed upon by the time work is scheduled to begin, installation shall be per plan with encasement as shown

Jacob Schmautz, PJHM 09/09/2022

APPROVED
DIV. OF THE STATE ARCHITECT
APP: 02-118369 INC:
REVIEWED FOR
SS☑ FLS☑ ACS☑
DATE: 06/13/2022

ADA REQUIREMENT: WHEN CATCH BASIN IS IN PATH OF TRAVEL, PROVIDE GRATE WITH 1/2" MAXIMUM SPACING IN DIRECTION OF TRAVEL.

GRATE SIZE	CLEAR OPENING FRAME	OVERALL FRAME	HEIGHT FRAME
12X12	11X11	14X14	1 1/2
14X14	13X13	17X17	1 1/2
16X16	15X15	18X18	1 1/2
18X18	16X16	20X20	1 1/2
20X20	18X18	22X22	1 1/2
24X24	22X22	26X26	1 1/2
38X38	36X36	41X41	2 3/4

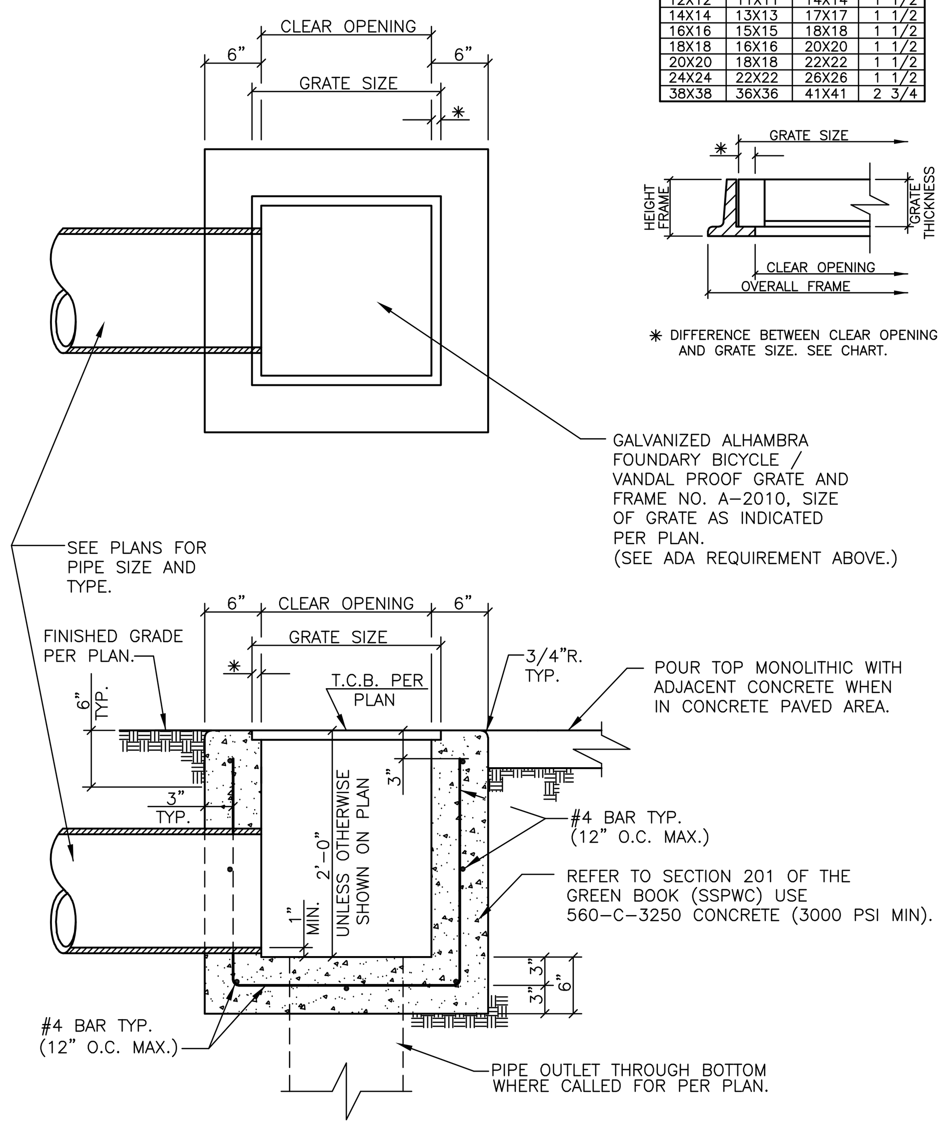

WATER QUALITY MANAGEMENT NOTE:
USE FLOGARD® T-SERIES CATCH BASIN INSERT MFG. BY:

OLDCASTLE PRECAST
WWW.OLDCASTLESTORMWATER.COM
PH. 800-579-8819

OR APPROVED EQUAL.

CATCH BASIN NO. 1 w/ FILTER (39) 1

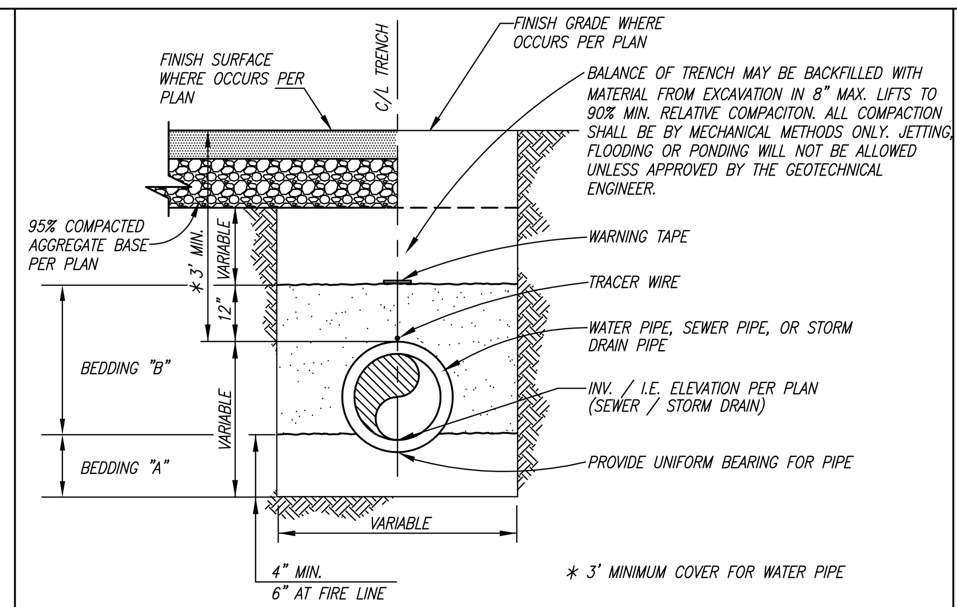

NOTES:

1. ALL TRENCHING AND BACKFILL SHALL BE DONE IN ACCORDANCE WITH SECTION 306, STANDARD SPECIFICATIONS FOR PUBLIC WORKS CONSTRUCTION, LATEST EDITION.
2. PIPE SHALL HAVE A MINIMUM OF 3' COVER UNLESS OTHERWISE SHOWN ON PLAN.
3. BEDDING "A" SHALL BE SAND (SAND EQIVALENT NOT LESS THAN 30) OR CRUSHED ROCK PER GRADATION TABLE HEREON.
4. BEDDING "B" SHALL BE COMPOSED OF SAND OR OTHER GRANULAR MATERIAL (SAND EQUIVALENT OF NOT LESS THAN 30) AND SHALL BE COMPACTED TO A RELATIVE COMPACTION OF NOT LESS THAN 90% WITHIN 3' FROM FINISH SURFACE, AND 85% COMPACTION BELOW 3'.

BEDDING "A" CRUSHED ROCK GRADATION	
SIEVE SIZE	% PASSING SIEVES
1"	100
3/4"	90-100
1/2"	30-60
3/8"	0-20
No. 4	0-5

ASTM C131 TEST GRADING-B

CORROSIVE SOILS NOTE

CORROSION PROTECTION SHALL BE PROVIDED FOR ALL BELOW GRADE METALLIC PIPING AND ASSOCIATED VALVES AND FITTINGS. SUCH PIPING SHALL BE PROTECTED FROM CORROSION BY ENCASEMENT IN A POLYETHYLENE PROTECTIVE WRAPPING, REFERRED TO HEREAFTER AS POLYWRAP. ALTHOUGH NOT INTENDED TO BE A COMPLETELY AIR AND WATER TIGHT ENCLOSURE, THE POLYWRAP SHALL PROVIDE A CONTINUOUS BARRIER BETWEEN THE PIPE AND SURROUNDING BEDDING AND BACKFILL.

TYPICAL PIPE TRENCH DETAIL 4

ZURN **FD**
3 [76] x 4 [102] Adjustable Floor Drain

SPECIFICATION SHEET
TAG _______

Dimensional Data (inches and [mm]) are Subject to Manufacturing Tolerances and Change Without Notice

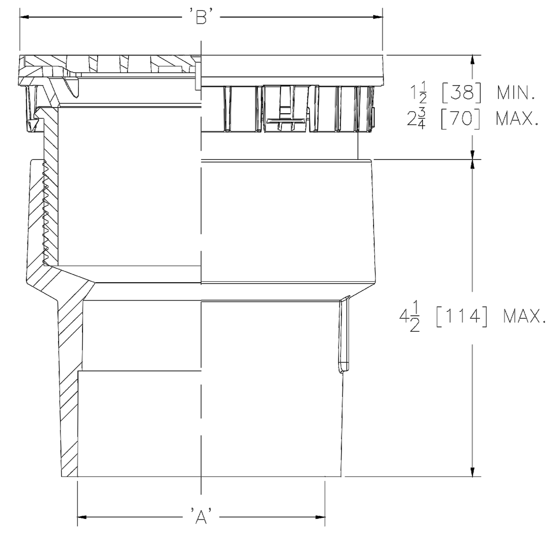

Dimensions in Inches [mm]				Approx. Wt. Lbs [kg]	Strainer Open Area Sq. In. [cm²]	Strainer Type
Product Number		A	B			
PVC Body	ABS Body	Pipe Size	Strainer Size			
FD-PV3	FD-AB3	3-4 [76-102]	5-3/16 [132]	4 [2]	6-1/4 [40]	Nickel Bronze Round
FD-PV3-R6	FD-AB3-R6	3-4 [76-102]	6 [152]	5 [2]	9 [58]	Nickel Bronze Round
FD-PV3-ST	FD-AB3-ST	3-4 [76-102]	5-3/16 [132]	4 [2]	9 [58]	Nickel Bronze Square
FD-PV3-S6	FD-AB3-S6	3-4 [76-102]	6 [152]	5 [2]	13 [84]	Nickel Bronze Square
FD-PV3-SS	FD-AB3-SS	3-4 [76-102]	5-3/16 [132]	4 [2]	6-1/4 [40]	Stainless Steel Round
FD-PV3-R6-SS	FD-AB3-R6-SS	3-4 [76-102]	6 [152]	5 [2]	9 [58]	Stainless Steel Round
FD-PV3-ST-SS	FD-AB3-ST-SS	3-4 [76-102]	5-3/16 [132]	4 [2]	9 [58]	Stainless Steel Square
FD-PV3-S6-SS	FD-AB3-S6-SS	3-4 [76-102]	6 [152]	5 [2]	13 [84]	Stainless Steel Square
FD-PV3-DI	FD-AB3-DI	3-4 [76-102]	5-3/16 [132]	4 [2]	6-1/4 [40]	Ductile Iron Round

ENGINEERING SPECIFICATION:
Zurn FD adjustable floor and shower drain, PVC or ABS 3 [76] x 4 [102] solvent weld body with bottom outlet and square or round light duty strainer in nickel bronze or stainless steel.

SUFFIXES
___ -P 1/2 [13] Trap Primer Connection
___ -PB Polished Brass
___ -VP Vandal Proof

Zurn Industries, LLC | Commercial Drainage
1801 Pittsburgh Avenue, Erie, PA U.S.A. 16502 · Ph. 855-663-9876, Fax 814-454-7929
In Canada | Zurn Industries Limited
3544 Nashua Drive, Mississauga, Ontario L4V 1L2 · Ph. 905-405-8272, Fax 905-405-1292
www.zurn.com

Rev. A
Date: 04/18/2018
C.N. No. 139913
Prod. | Dwg. No. FD

3"x4" ADJUSTIBLE FLOOR DRAIN (52) 7

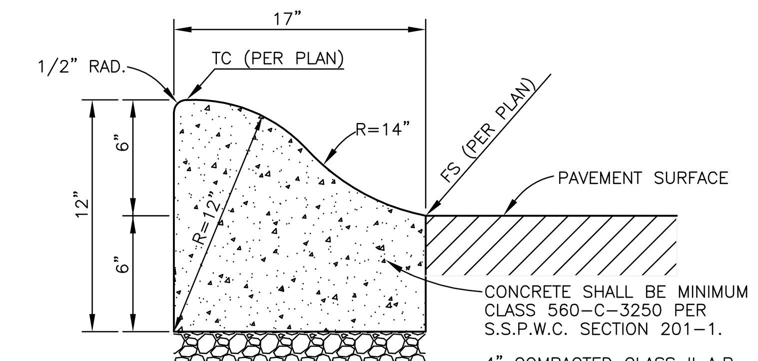

NOTES:

1. ALL EXPOSED EDGES SHALL HAVE A 1/2" RADIUS.
2. 1/4" x 2" WEAKENED PLANE JOINTS SHALL BE PLACED IN CURBING AT REGULAR INTERVALS OF 10'. 1/2" THICK PREFORMED EXPANSION JOINTS AT 30' INTERVALS, AND AT DRIVE APPROACHES, B.C.'S, E.C.'S, CROSS GUTTERS AND CATCH BASIN TRANSITIONS.

6" ROLLED CONCRETE CURB (16) 10

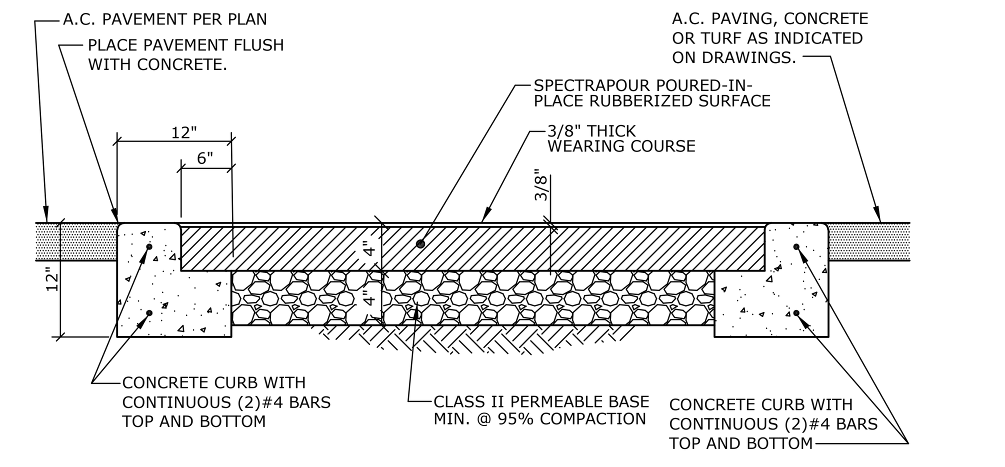

MFG. BY: SPECTRATURF
555 SOUTH PROMENANCE AVE. #103
CORONA, CA 92879
PH.: (800)875-5788, WWW.SPECTRATURF.COM

4

RUBBERIZED PLAY AREA DETAIL (14) 11

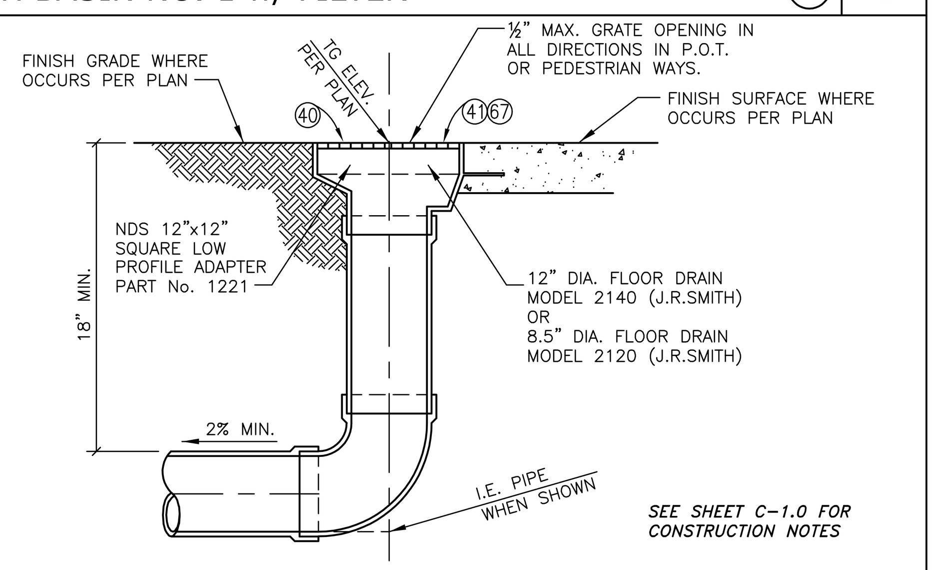

SEE SHEET C-1.0 FOR CONSTRUCTION NOTES

TYPICAL AREA DRAIN (40)(41)(68) 2

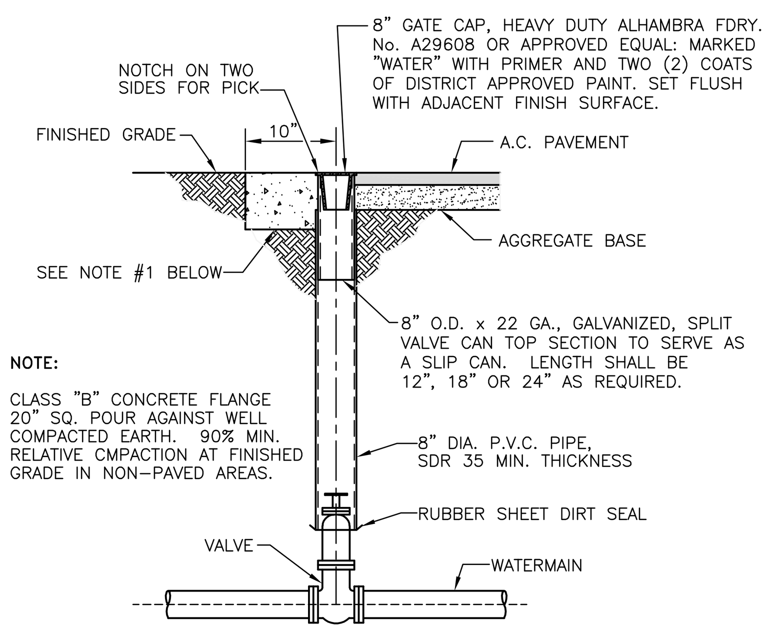

NOTE:

1. CLASS "B" CONCRETE FLANGE 20" SQ. POUR AGAINST WELL COMPACTED EARTH. 90% MIN. RELATIVE CMPACTION AT FINISHED GRADE IN NON-PAVED AREAS.

CORROSIVE SOILS NOTE

CORROSION PROTECTION SHALL BE PROVIDED FOR ALL BELOW GRADE METALLIC PIPING AND ASSOCIATED VALVES AND FITTINGS. SUCH PIPING SHALL BE PROTECTED FROM CORROSION BY ENCASEMENT IN A POLYETHYLENE PROTECTIVE WRAPPING, REFERRED TO HEREAFTER AS POLYWRAP. ALTHOUGH NOT INTENDED TO BE A COMPLETELY AIR AND WATER TIGHT ENCLOSURE, THE POLYWRAP SHALL PROVIDE A CONTINUOUS BARRIER BETWEEN THE PIPE AND SURROUNDING BEDDING AND BACKFILL.

VALVE CAN DETAIL 5

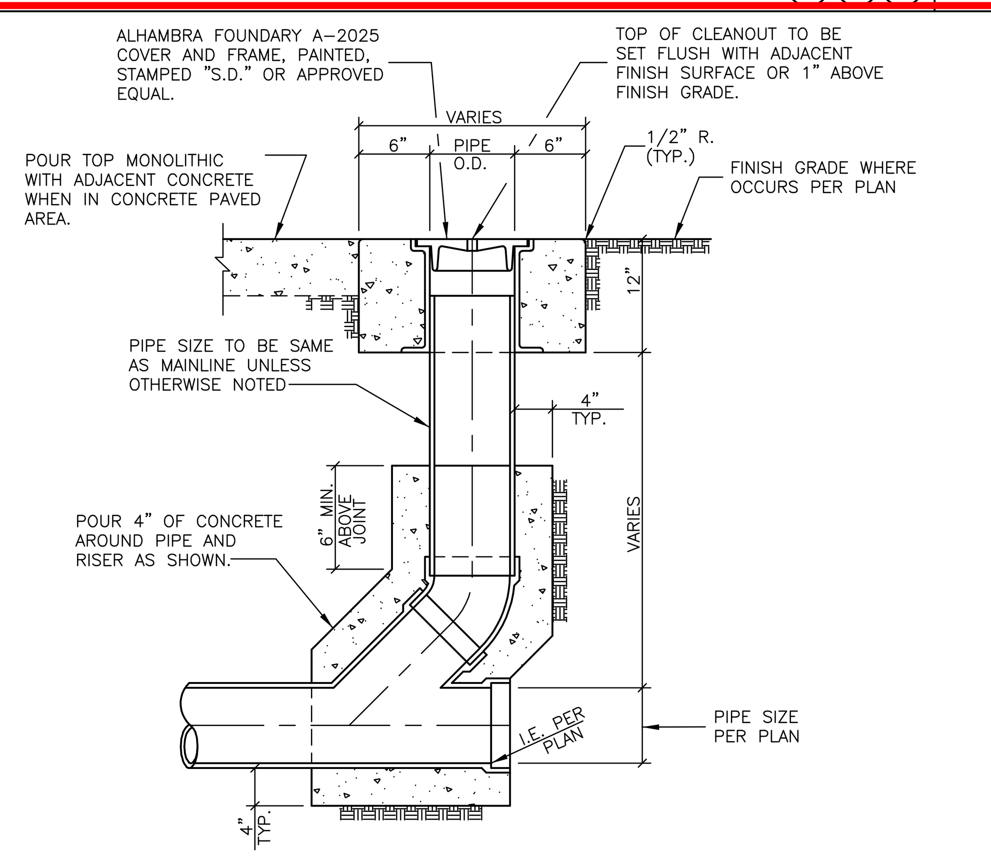

STORM DRAIN / SEWER CLEANOUT (43)(63) 3

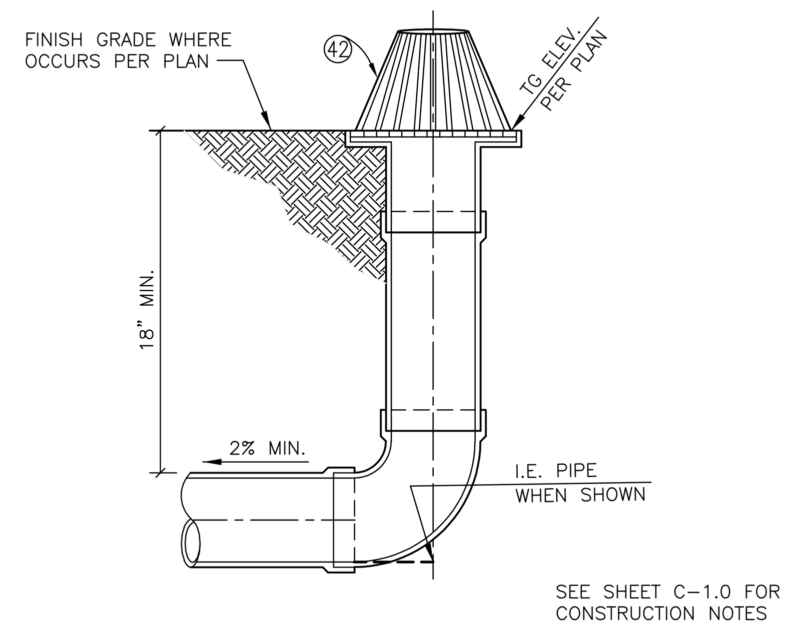

SEE SHEET C-1.0 FOR CONSTRUCTION NOTES

TYP. ATRIUM DRAIN (42) 6

4 INDICATES PLAN REVISION PER ADDENDUM No. 4

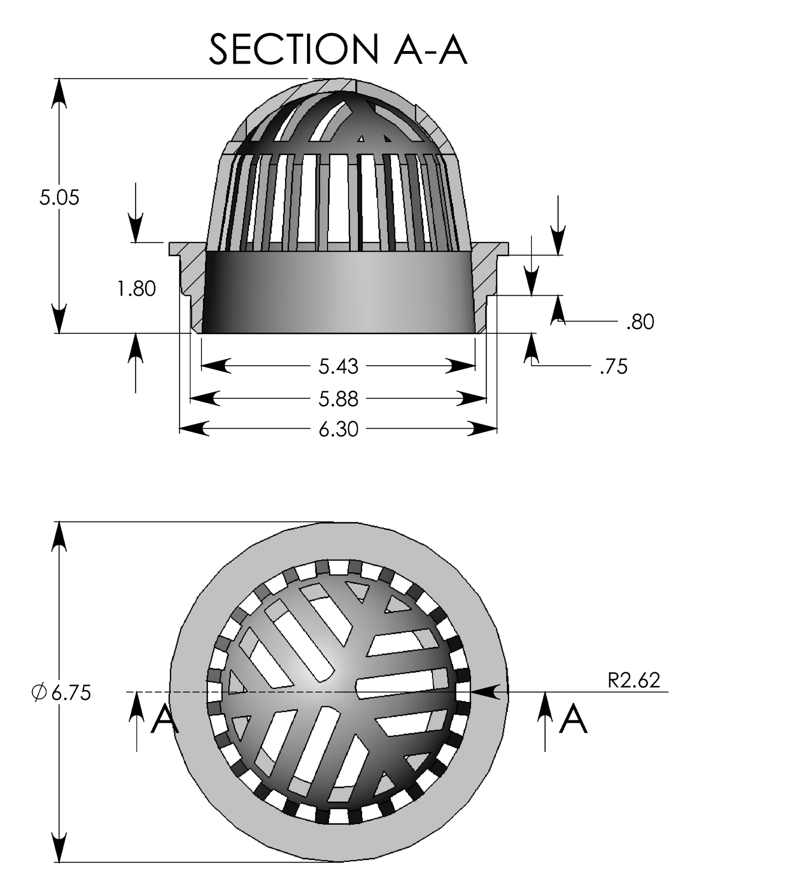

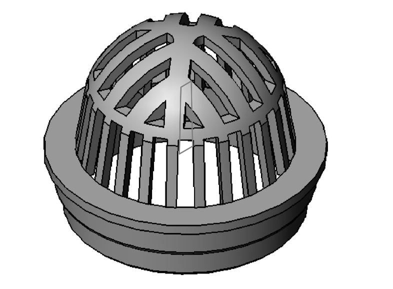

Material:	Polyethylene
Open Area:	15 sq. in.
Flow Rate:	19.6 GPM
ADA:	No
Wt. Class:	No
Heel:	No
Color:	Black

Bottom Outlet Connects to; 6" S&D Pipe, S&D Hub, Corrugated, and Sch 40

FSD-064-A
Atrium Grate
Bottom Outlet
17Oct13

6" ATRIUM GRATE (51) 8

CURVE DATA											
No	△	R	L	No	△	R	L	No	△	R	L
C1	° ' "	35.00'	33.60'	C29	° ' "	.'	.'	C57	° ' "	2177.37'	117.00'
C2	° ' "	72.00'	83.25'	C30	° ' "	2832.31'	159.33'	C58	° ' "	2177.37'	162.29'
C3	° ' "	250.00'	110.77'	C31	° ' "	1084.00'	133.84'	C59	° ' "	1047.00'	128.90'
C4	° ' "	115.00'	205.85'	C32	° ' "	2137.37'	133.30'	C60	° ' "	2792.31'	190.31'
C5	° ' "	1437.19'	55.46'	C33	° ' "	.'	.'	C61	° ' "	56.00'	44.36'
C6	° ' "	1000.00'	47.72'	C34	° ' "	.'	.'	C62	° ' "	.'	.'
C7	° ' "	1000.00'	75.84'	C35	° ' "	2147.37'	16.80'	C63	° ' "	76.00'	79.92'
C8	° ' "	980.00'	90.00'	C36	° ' "	2147.37'	169.31'	C64	° ' "	4.50'	11.36'
C9	° ' "	1000.00'	39.01'	C37	° ' "	1084.00'	197.91'	C65	° ' "	100.00'	59.40'
C10	° ' "	2221.37'	396.11'	C38	° ' "	1521.19'	40.14'	C66	° ' "	100.00'	58.44'
C11	° ' "	1000.00'	39.68'	C39	° ' "	.'	.'	C67	° ' "	2802.31'	161.15'
C12	° ' "	980.00'	80.15'	C40	° ' "	.'	.'	C68	° ' "	1054.00'	130.14'
C13	° ' "	2728.31'	9.84'	C41	° ' "	100.00'	24.62'	C69	° ' "	2167.37'	168.99'
C14	° ' "	1000.00'	83.79'	C42	° ' "	100.00'	62.72'	C70	° ' "	2167.37'	205.50'
C15	° ' "	2748.31'	175.40'	C43	° ' "	50.00'	30.47'	C71	° ' "	1054.00'	192.43'
C16	° ' "	1000.00'	189.75'	C44	° ' "	282.00'	100.17'	C72	° ' "	1491.19'	41.56'
C17	° ' "	621.64'	123.81'	C45	° ' "	40.00'	42.25'	C73	° ' "	120.00'	48.57'
C18	° ' "	112.00'	132.44'	C46	° ' "	67.00'	64.32'	C74	° ' "	120.00'	61.19'
C19	° ' "	35.00'	36.68'	C47	° ' "	25.50'	20.90'	C75	° ' "	35.00'	54.98'
C20	90°00'00"	5.00'	7.85'	C48	° ' "	25.50'	21.06'				
C21	° ' "	25.50'	21.13'	C49	° ' "	4.50'	12.03'				
C22	° ' "	35.00'	54.98'	C50	° ' "	91.00'	72.97'				
C23	° ' "	67.00'	70.22'	C51	° ' "	.'	.'				
C24	° ' "	80.00'	94.60'	C52	° ' "	71.00'	43.69'				
C25	° ' "	653.64'	130.18'	C53	° ' "	1481.19'	57.16'				
C26	° ' "	80.00'	98.50'	C54	° ' "	1044.00'	190.60'				
C27	° ' "	80.00'	32.44'	C55	° ' "	2177.37'	72.97'				
C28	° ' "	.'	.'	C56	° ' "	2172.37'	26.94'				

CURVE DATA TABLE 9

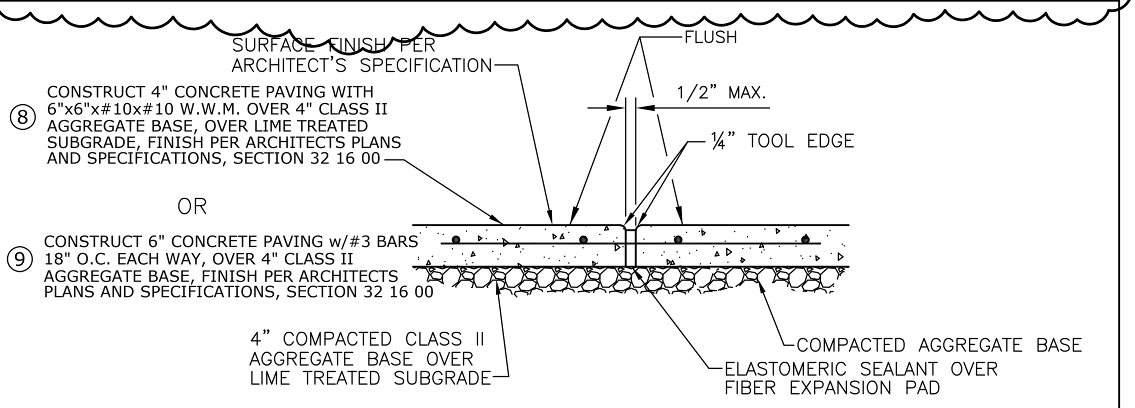

TYP. EXPANSION JOINT
N.T.S.

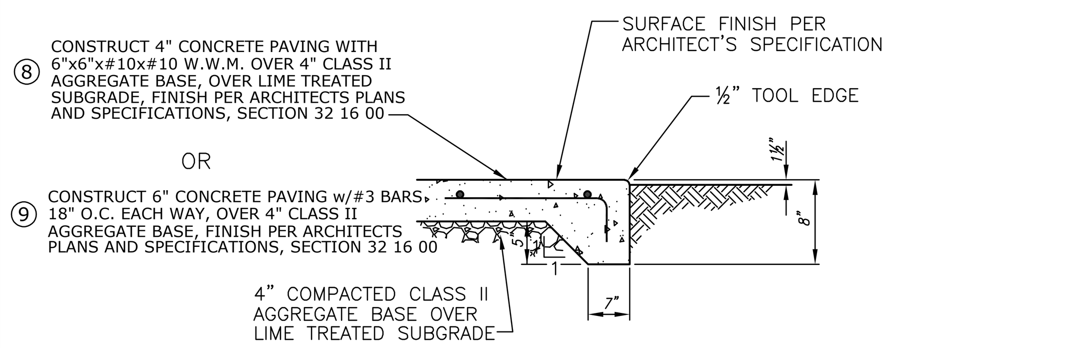

TYP. PLANTER EDGE
N.T.S.

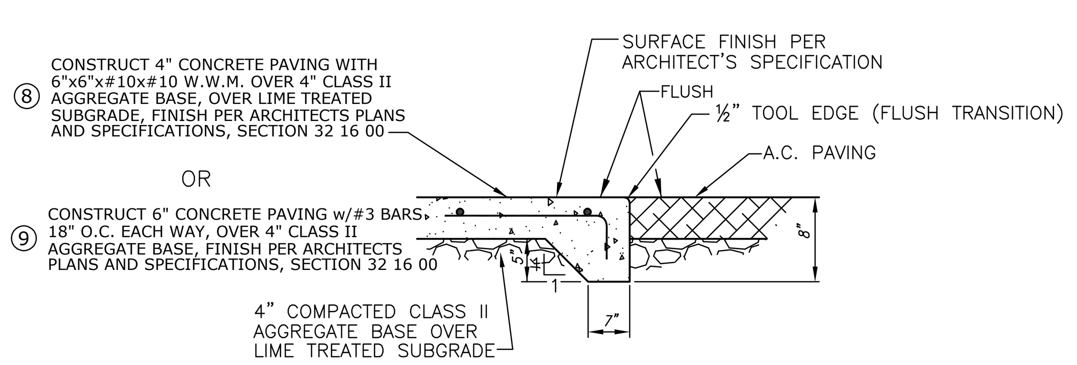

TYP. CONCRETE/A.C. PAVING
N.T.S.

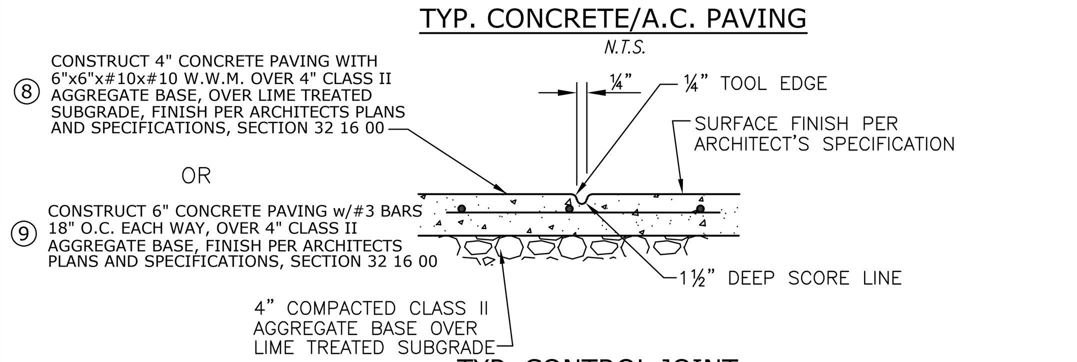

TYP. CONTROL JOINT
N.T.S.

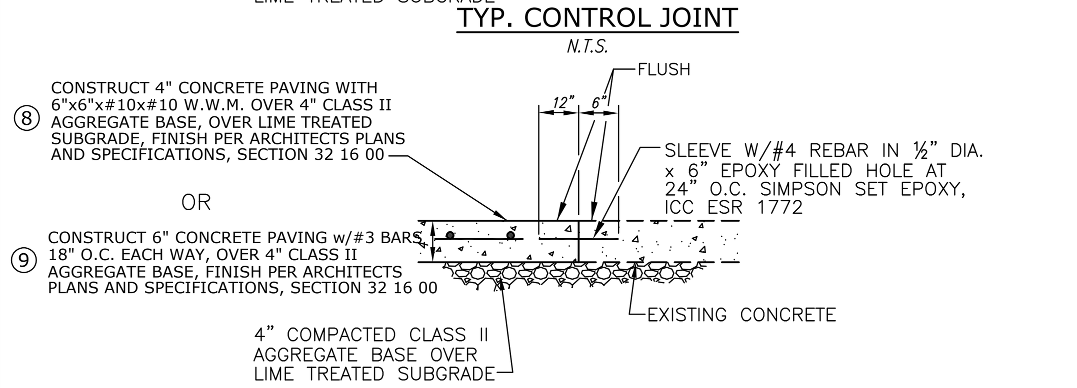

SEE SHEET C-1.0 FOR CONSTRUCTION NOTES

TYP. JOINT AT EXISTING CONCRETE
N.T.S.

CONCRETE PAVING DETAIL (8)(9) 12

pjhm architects
www.pjhm.com

LICENSED ARCHITECT
KENNETH J. PODANY
No. C28889
Ren. 3/23
STATE OF CALIFORNIA

SLR
Civil Engineering, Inc.
6840 INDIANA AVENUE • SUITE 130
RIVERSIDE, CA 92506
(951) 683-8088 FAX (951) 683-6915

REGISTERED PROFESSIONAL ENGINEER
STEVEN L. RA[illegible]
35334
9-30-23
6/02/2022
CIVIL
STATE OF CALIFORNIA

4 ADDENDUM: 04/18/2022

COORAL HOLLOW ELEMENTARY SCHOOL
JEFFERSON UNIFIED SCHOOL DISTRICT

File name:R:\Schools\Jeffrsn\Corral-Hollow\DSA\Addendum 4\ADD4-C-2.0.dwg Rel. 2006
Plot date: 6/1/2022 3:57 PM

102-0466

DETAILS

ADD-4
C-2.0

BHM CONSTRUCTION, INC.

221 Gateway Road W., Ste. 405, Napa, CA 94558 PHONE: (707) 643-4580 FAX: (707) 643-4581

CHANGE PROPOSAL ESTIMATE

TO: PJHM Architects
24461 Ridge Route Drive
Laguna Hills, CA 92653

ATTN: **Jacob Schmautz**

CPE # 002

DATE: Sep 20 2022
PROJECT: Corral Hollow ES
JOB # 219

We submit for your approval the following cost estimate of changes in work as follows:
Credit to eliminate 12 domestic water shut off valves shown in the civil drawings per RFI #18.
Shut off valves will be provided per Plumbing floor drawings.

This change was requested by: RFI 18

ITEM	ENCL. #	LABOR	MTL/EQUIP	SUBS	TOTAL
BHM CONSTRUCTION		$0.00	$0.00		$0.00
WALLER, INC.	PCO 01			($7,777.00)	($7,777.00)
					$0.00
					$0.00
					$0.00
					$0.00
					$0.00
					$0.00
					$0.00
					$0.00
					$0.00
					$0.00
					$0.00
		$0.00	$0.00	($7,777.00)	($7,777.00)
MARK-UP ON LABOR	10 %	$0.00			$0.00
				SUBTOTAL	($7,777.00)
MARK-UP ON MATERIAL & EQUIP.	10 %	$0.00			$0.00
				SUBTOTAL	($7,777.00)
MARK-UP ON SUBCONTRACTORS	5 %	$0.00			$0.00
				SUBTOTAL	($7,777.00)
ADDITIONAL BOND PREMIUM @	1 %				$0.00
					($7,777.00)
TOTAL AMOUNT FOR CHANGE PROPOSAL					($7,777)
TIME EXTENSION REQUIRED FOR THIS CHANGE					**0**
					(WORKING DAYS)

☐ We have proceeded with this change, and work orders have been sent to the subcontractors, in accordance with

☐ We will not proceed with this change until receipt of a signed copy of this proposal. This proposal must be accepted by ASAP in order to avoid additional time extension and/or expense.

APPROVED: _____ BHM CONSTRUCTION

DATE: _____ BY: _____

CPE #002- BHM Cost Breakdown

ELIMINATE 12 DW SHUT OFF VALVES DUPLICATED ON PLUMBING DRAWINGS.

LABOR

ITEM	QUANTITY	UNITS	DESCRIPTION	$/UNIT	COSTS
					0.00
					0.00
					0.00
					0.00
					0.00
					0.00
					0.00
					0.00
					0.00
					0.00
					0.00
					0.00
					0.00
					0.00

MATERIALS

ITEM	QUANTITY	UNITS	DESCRIPTION	$/UNIT	COSTS
					0.00
					0.00
					0.00
					0.00
					0.00
					0.00
					0.00

EQUIPMENT

ITEM	QUANTITY	UNITS	DESCRIPTION	$/UNIT	COSTS
					$0.00
					$0.00
					$0.00
					$0.00
					$0.00
					$0.00
					$0.00
					$0.00

WALLER, INC.

CA CL #879648
2229 Trinity Drive
Brentwood, CA 94513
Mike.WallerInc@comcast.net

Contact: Mike Waller
Phone: 925-634-3663
Fax: 925-634-3684
Cell: 925-382-9762

Proposal Date: 9/19/2022

Union: Yes
Bond: Excluded
Sales Tax: Included
Bid Date: 9/19/2022

Quote For: Corral Hollow Elementary School, Tracy, CA

Quote To: Nate Palmer
BHM Construction

Phone: 707.643.4580
Cell: 415.361.7550
Email: Nate Palmer
<natep@bhmconstruction.com>

Scope: PCO#1: SITE WATER SHUT-OFF VALVE CREDIT, per RFI #018

			Labor	Matl.'s	Equip	Subs	M.U. 5%	Totals
CREDIT 3" VALVE	-2	EA	$ (454)	$ (950)	$ (216)		$ (81)	$(1,701)
CREDIT 2.5" VALVE	-1	EA	$ (227)	$ (421)	$ (108)		$ (38)	$ (794)
CREDIT 2" VALVE	-4	EA	$ (606)	$(1,299)	$ (289)		$ (110)	$(2,304)
CREDIT 1.5" VALVE	-3	EA	$ (454)	$(1,045)	$ (216)		$ (86)	$(1,801)
CREDIT 1.25" VALVE	-2	EA	$ (303)	$ (675)	$ (144)		$ (56)	$(1,178)
SUBTOTAL, CREDITS			$(2,044)	$(4,390)	$ (973)	$ -	$ (370)	$(7,777)
TOTAL PRICE FOR THIS PROPOSAL								$(7,777)

Notes:

1.

Inclusions:

1. All inclusions and exclusions per our base subcontract.
2. **Credit to eliminate the site water shut-off valve, shown on the Civil Plans, connected to the Domestic Water Main, per RFI #018.**

Exclusions:

1.

Waller, Inc.

Michael G. Waller

Michael G. Waller, Vice President

Activity Unit Price Summary

Biditem Activity	Description	Quantity	Unit	Calendar WC	Hrs/Shift	Labor	Perm Material	Constr Matl/Exp	Equip-Ment	Sub-Contract	Total
*** 7200	**PCO #1: CREDIT 3" VALVE**					Takeoff:	-2.00 EA		Bid:	-2.00 EA	
5752	***RAISE IRON, VALVE***	-2.00	EA	6316-1	8.00	-454	-924	-26	-216		-1,621
Mh: -6.00	Shifts: -0.4	Mh/Un: 3.0000		Un/Sh:	5.3348	227.10	462.02	12.99	108.19		810.30
##########NonAdditive Item		**7200**	**##########**			-454	-924	-26	-216		-1,621
Mh: -6.00	Mh/Un: 3.0000					227.10	462.02	12.99	108.19		810.30
*** 7205	**PCO #1: CREDIT 2 1/2" VALVE**					Takeoff:	-1.00 EA		Bid:	-1.00 EA	
5752	***RAISE IRON, VALVE***	-1.00	EA	6316-1	8.00	-227	-408	-13	-108		-756
Mh: -3.00	Shifts: -0.2	Mh/Un: 3.0000		Un/Sh:	5.3362	227.12	407.90	12.99	108.19		756.20
##########NonAdditive Item		**7205**	**##########**			-227	-408	-13	-108		-756
Mh: -3.00	Mh/Un: 3.0000					227.12	407.90	12.99	108.19		756.20
*** 7210	**PCO #1: CREDIT 2" VALVE**					Takeoff:	-4.00 EA		Bid:	-4.00 EA	
5752	***RAISE IRON, VALVE***	-4.00	EA	6316-1	8.00	-606	-1,282	-17	-289		-2,193
Mh: -8.00	Shifts: -0.5	Mh/Un: 2.0000		Un/Sh:	8.0016	151.40	320.42	4.33	72.13		548.28
##########NonAdditive Item		**7210**	**##########**			-606	-1,282	-17	-289		-2,193
Mh: -8.00	Mh/Un: 2.0000					151.40	320.42	4.33	72.13		548.28
*** 7215	**PCO #1: CREDIT 1 1/2" VALVE**					Takeoff:	-3.00 EA		Bid:	-3.00 EA	
5752	***RAISE IRON, VALVE***	-3.00	EA	6316-1	8.00	-454	-1,032	-13	-216		-1,716
Mh: -6.00	Shifts: -0.4	Mh/Un: 2.0000		Un/Sh:	8.0021	151.40	344.05	4.33	72.13		571.91
##########NonAdditive Item		**7215**	**##########**			-454	-1,032	-13	-216		-1,716
Mh: -6.00	Mh/Un: 2.0000					151.40	344.05	4.33	72.13		571.91
*** 7220	**PCO #1: CREDIT 1 1/4" VALVE**					Takeoff:	-2.00 EA		Bid:	-2.00 EA	
5752	***RAISE IRON, VALVE***	-2.00	EA	6316-1	8.00	-303	-666	-9	-144		-1,121
Mh: -4.00	Shifts: -0.2	Mh/Un: 2.0000		Un/Sh:	8.0032	151.41	332.88	4.33	72.13		560.74
##########NonAdditive Item		**7220**	**##########**			-303	-666	-9	-144		-1,121
Mh: -4.00	Mh/Un: 2.0000					151.41	332.88	4.33	72.13		560.74
Mh: -27.00	*****REPORT TOTALS*****					**-2,044**	**-4,312**	**-78**	**-974**		**-7,407**

Activity Description indicates non-additve activity
N = Activity not adjusted to bid quantity

BHM Construction, Inc.
221 Gateway Road W, Suite 405
Napa, California 94558
P: 7076434580
F: 7076434581

Project: 219 219 - Corral Hollow Elementary School
7000 Coriander Street
Tracy, California 95377

RFI #18: Site Water Shut Off Valves

Status	Open		
To	Allie Fitzgerald (PJHM)	**From**	Jack Doyle (BHM Construction, Inc.) 221 Gate Way Rd W, Ste 405 Napa, California 94558
Date Initiated	Sep 8, 2022	**Due Date**	Sep 13, 2022
Location		**Project Stage**	
Cost Impact		**Schedule Impact**	
Spec Section		**Cost Code**	
Drawing Number	C6.0 – C6.3	**Reference**	
Linked Drawings			
Received From	Nate Palmer (BHM Construction, Inc.)		
Copies To	Tim Boczanowski (TMD Construction Services), Kyle Braunschweig (BHM Construction, Inc.), Jack Doyle (BHM Construction, Inc.), Allie Fitzgerald (PJHM), Kevin Kaiser (PJHM), Nate Palmer (BHM Construction, Inc.), Jacob Schmautz (PJHM)		

Activity

Question

Question from Jack Doyle BHM Construction, Inc. *on Thursday, Sep 8, 2022 at 03:47 PM PDT*

Reference plan sheets C6.0 – C6.3, then reference Plumbing Floor Plans

Site water plans show shut off valves connected to the water main on each of the domestic water lateral lines to the buildings. Plumbing floor plans also show another shut off valve prior to entering the building. Having 2 shut off valves on each line seems redundant, and usually the shut off valve is located within 5' of the building. Please confirm if 2 shut off valves are being requested; if not, is it acceptable to eliminate the shut off valves shown on civil site water plans.

Attachments
RFI 018 - Site Water Shut Off Valves.pdf

Awaiting an Official Response

BHM Construction, Inc.
Lic. 900404

RFI#	18
Date Submitted:	9/8/2022
Priority	Hot

Corral Hollow ES

Architect	Owner
PJHM	Jefferson School District
24461 Ridge Rte Dr	1219 Whispering Wind Drive
Laguna Hills, CA , 92653	Tracy, CA 95377
(949) 496-6191	650.625.6589

General Contractor	Subcontractor:
BHM Construction	BHM Construction
221 Gateway Rd W, Ste. 405	
Napa, CA 94558	
707.643.4580	

Subject:	Site Water Shut Off Valves
Specification Section:	
Plan/Detail Sheet:	C6.0 – C6.3
Attachments:	
Reference:	
Cost Impact:	

Question:

Reference plan sheets C6.0 – C6.3, then reference Plumbing Floor Plans

Site water plans show shut off valves connected to the water main on each of the domestic water lateral lines to the buildings. Plumbing floor plans also show another shut off valve prior to entering the building. Having 2 shut off valves on each line seems redundant, and usually the shut off valve is located within 5' of the building. Please confirm if 2 shut off valves are being requested; if not, is it acceptable to eliminate the shut off valves shown on civil site water plans.

Response:

OK to delete Civil shut off valve only when it is a redundant shut off valve to a building service. This does not include main line valves.

Steve Ray, SLR 9/8/22

PJHM Supplemental response: provide credit for review prior to proceeding with the installation. If credit is not agreed upon by the time work is scheduled to begin, installation shall be per plan with shut off valves as shown.

Jacob Schmautz, PJHM 09/09/2022

BHM CONSTRUCTION, INC.

221 Gateway Road W., Ste. 405, Napa, CA 94558 PHONE: (707) 643-4580 FAX: (707) 643-4581

CHANGE PROPOSAL ESTIMATE

TO: PJHM Architects
24461 Ridge Route Drive
Laguna Hills, CA 92653

ATTN: **Jacob Schmautz**

CPE # 003

DATE: Oct 27 2022
PROJECT: Corral Hollow ES
JOB # 219

We submit for your approval the following cost estimate of changes in work as follows:
Per CCD #02, additional cost to furnish and install (2) additional Simpson HD19 hold downs per SSK-1. Cost of added 6x6 is offset with eliminating contract channel framing at this condition.

This change was requested by: CCD 02

ITEM	ENCL. #	LABOR	MTL/EQUIP	SUBS	TOTAL
BHM CONSTRUCTION		$206.52	$426.54		$633.06
					$0.00
					$0.00
					$0.00
					$0.00
					$0.00
					$0.00
					$0.00
					$0.00
					$0.00
					$0.00
					$0.00
					$0.00
		$206.52	$426.54	$0.00	$633.06
MARK-UP ON LABOR	10 %	($206.52)			$20.65
				SUBTOTAL	$653.71
MARK-UP ON MATERIAL & EQUIP.	10 %	($426.54)			$42.65
				SUBTOTAL	$696.37
MARK-UP ON SUBCONTRACTORS	5 %	$0.00			$0.00
				SUBTOTAL	$696.37
ADDITIONAL BOND PREMIUM @	1 %				$6.96
					$703.33
TOTAL AMOUNT FOR CHANGE PROPOSAL					$703
TIME EXTENSION REQUIRED FOR THIS CHANGE					0 (WORKING DAYS)

☐ We have proceeded with this change, and work orders have been sent to the subcontractors, in accordance with

☐ We will not proceed with this change until receipt of a signed copy of this proposal. This proposal must be accepted by ASAP in order to avoid additional time extension and/or expense.

APPROVED: _____ BHM CONSTRUCTION

DATE: _____ BY: _____

CPE #003- BHM Cost Breakdown

CCD 02 - Added PH4A at Grid Line 7 & G Building A 2nd Floor

LABOR

ITEM	QUANTITY	UNITS	DESCRIPTION	$/UNIT	COSTS
					0.00
1	2.00	HRS	Layout, Drill, Install (2) HD19's	$103.26	206.52
					0.00
					206.52

MATERIALS

ITEM	QUANTITY	UNITS	DESCRIPTION	$/UNIT	COSTS
					0.00
1	2.00	EA	Simpson HD19 Hold Downs	$167.89	335.78
2	2.00	EA	1" x 36" Threaded Rod	$41.69	83.38
3	2.00	EA	1" Hex	$3.69	7.38
					0.00
					0.00
					426.54

EQUIPMENT

ITEM	QUANTITY	UNITS	DESCRIPTION	$/UNIT	COSTS
					$0.00
					$0.00
					$0.00
					$0.00
					$0.00
					$0.00
					$0.00
					$0.00

BHM Construction, Inc.
Rates effective June 25,2022
Updated June 28, 2022 (New fringe allocations & WC rates)

Carpenters Foreman 2 (General)

Hourly Wage			$ 75.37	
Vacation A			$ 2.95	
Work Fees			$ 2.29	
Taxable Wage			$ 80.61	
Union Benefits:				
Annuity			$ 2.55	
H & W			$ 12.10	
Pension			$ 11.10	
Appr. Train			$ 1.13	
Ind Adv			$ 0.34	
Wrk Pres.			$ 0.05	
Total Union Fringes			$ 27.27	33.83%
FICA	% Rate	7.65%	$ 6.17	
SUI	% Rate	6.20%	$ 5.00	
FUI	% Rate	0.60%	$ 0.48	
Workers Comp	% Rate	4.16%	$ 3.35	
Liability Ins.		3.29%	$ 2.65	
Taxes & Insurance Total			$ 17.65	21.90%
Labor Burden Amt.			$ 44.92	55.73%
Total Labor Cost			$ 125.53	
		Straight	**$ 125.53**	
		OT	**$171.47**	
		DT	**$ 217.41**	

Carpenters Foreman 1

Hourly Wage			$ 62.81	
Vacation A			$ 2.95	
Work Fees			$ 2.29	
Taxable Wage			$ 68.05	
Union Benefits:				
Annuity			$ 2.55	
H & W			$ 12.10	
Pension			$ 11.10	
Appr. Train			$ 1.13	
Ind Adv			$ 0.34	
Wrk Pres.			$ 0.05	
Total Union Fringes			$ 27.27	40.07%
FICA	% Rate	7.65%	$ 5.21	
SUI	% Rate	6.20%	$ 4.22	
FUI	% Rate	0.60%	$ 0.41	
Workers Comp	% Rate	4.16%	$ 2.83	
Liability Ins.		3.29%	$ 2.24	
Taxes & Insurance Total			$ 14.90	21.90%
Labor Burden Amt.			$ 42.17	61.97%
Total Labor Cost			$ 110.22	
		Straight	**$ 110.22**	
		OT	**$ 148.51**	
		DT	**$ 186.79**	

Carpenter Journeyman

Hourly Wage			$ 57.10	
Vacation A			$ 2.95	
Work Fees			$ 2.29	
Taxable Wage			$ 62.34	
Union Benefits:				
Annuity			$ 2.55	
H & W			$ 12.10	
Pension			$ 11.10	
Appr. Train			$ 1.13	
Ind Adv			$ 0.34	
Wrk Pres.			$ 0.05	
Total Union Fringes			$ 27.27	43.74%
FICA	% Rate	7.65%	$ 4.77	
SUI	% Rate	6.20%	$ 3.87	
FUI	% Rate	0.60%	$ 0.37	
Workers Comp	% Rate	4.16%	$ 2.59	
Liability Ins.		3.29%	$ 2.05	
Taxes & Insurance Total			$ 13.65	21.90%
Labor Burden Amt.			$ 40.92	65.64%
Total Labor Cost			$ 103.26	
		Straight	103.26	
		OT	138.06	
		DT	172.87	

Laborer Group 3 Foreman

Hourly Wage			$ 36.55	
Vacation A			$ 3.05	
Taxable Wage			$ 39.60	
Union Benefits:				
Annuity			$ 4.40	
H & W			$ 9.30	
Pension			$ 8.96	
Appr. Train			$ 0.50	
Cnt Admin			$ 0.10	
CEA Bldg Ind			$ 0.18	
Total Union Fringes			$ 23.44	59.19%
FICA	% Rate	7.65%	$ 3.03	
SUI	% Rate	6.20%	$ 2.46	
FUI	% Rate	0.60%	$ 0.24	
Workers Comp	% Rate	4.06%	$ 1.61	
Liability Ins.		3.29%	$ 1.30	
Taxes & Insurance Total			$ 8.63	21.80%
Labor Burden Amt.			$ 32.07	80.99%
Total Labor Cost			$ 71.67	
		Straight	$ 71.67	
		OT	$ 93.94	
		DT	$ 116.19	

(1/5/09)

Laborer Group 3

Hourly Wage			$ 33.80	
Vacation A			$ 3.05	
Taxable Wage			$ 36.85	
Union Benefits:				
Annuity			$ 4.40	
H & W			$ 9.30	
Pension			$ 8.96	
Appr. Train			$ 0.50	
Cnt Admin			$ 0.10	
CEA Bldg Ind			$ 0.18	
Total Union Fringes			$ 23.44	63.61%
FICA	% Rate	7.65%	$ 2.82	
SUI	% Rate	6.20%	$ 2.28	
FUI	% Rate	0.60%	$ 0.22	
Workers Comp	% Rate	4.06%	$ 1.50	
Liability Ins.		3.29%	$ 1.21	
Taxes & Insurance Total			$ 8.03	21.80%
Labor Burden Amt.			$ 31.47	85.41%
Total Labor Cost			$ 68.32	
		Straight	$ 68.32	
		OT	$ 88.91	
		DT	$ 109.49	

Operators Group 3

Hourly Wage			$ 52.91	
Vacation A			$ 5.87	
Taxable Wage			$ 58.78	
Union Benefits:				
Annuity			$ 1.00	
H & W			$ 10.84	
Pen H&W			$ 2.54	
Pension			$ 10.78	
Appr. Train			$ 1.12	
Vacation B			$ 0.03	
Cnt Admin			$ 0.26	
Hvy & HWY			$ 0.15	
Ind Adv			$ 0.06	
Bus Dvlp fnd			$ 0.08	
Total Union Fringes			$ 26.86	45.70%
FICA	% Rate	7.65%	$ 4.50	
SUI	% Rate	6.20%	$ 3.64	
FUI	% Rate	0.60%	$ 0.35	
Workers Comp	% Rate	2.80%	$ 1.65	
Liability Ins.		3.29%	$ 1.93	
Taxes & Insurance Total			$ 12.07	20.54%
Labor Burden Amt.			$ 38.93	66.24%
Total Labor Cost			$ 97.71	
		Straight	$ 97.71	
		OT	$ 129.61	
		DT	$ 161.49	

Operators Group 2

Hourly Wage			$ 54.39	
Vacation A			$ 5.87	
Taxable Wage			$ 60.26	
Union Benefits:				
Annuity			$ 1.00	
H & W			$ 10.84	
Pen H&W			$ 2.54	
Pension			$ 10.78	
Appr. Train			$ 1.12	
Vacation B			$ 0.03	
Cnt Admin			$ 0.26	
Hvy & HWY			$ 0.15	
Ind Adv			$ 0.06	
Bus Dvlp fnd			$ 0.08	
Total Union Fringes			$ 26.86	44.57%
FICA	% Rate	7.65%	$ 4.61	
SUI	% Rate	6.20%	$ 3.74	
FUI	% Rate	0.60%	$ 0.36	
Workers Comp	% Rate	2.80%	$ 1.69	
Liability Ins.		3.29%	$ 1.98	
Taxes & Insurance Total			$ 12.38	20.54%
Labor Burden Amt.			$ 39.24	65.11%
Total Labor Cost			$ 99.50	
		Straight	$ 99.50	
		OT	$ 132.28	
		DT	$ 165.06	

Est Total: $433.92

Item(s): 8

[Simpson Strong-Tie HD 19360 lb Max 1.125 to 1.75" 1" Stud Bolt Gray Painted 3 ga Holdown]

SKU#: 137HD19

2

$335.78

$167.89 each

Get it by **Wed, Nov 2, 2022**
Shipping from: **Livermore, CA**
Delivery zip: **94558**

Image coming soon

[BSMI 1 x 36" Hot Dipped Galvanized Low Carbon Steel All Threaded Rod 3/BD]

SKU#: 277100C36THR36HM

2

$83.38

$41.69 each

Get it by **Thu, Nov 3, 2022**
Shipping from: **Santa Maria, CA**
Delivery zip: **94558**

1″ Hot Dip Galvanized Hex Nut

SKU#: 277HNG1

4

$14.76
$3.69 each

Get it by **Tue, Nov 1, 2022**
Shipping from: **Fairfield, CA**
Delivery zip: **94558**

Special Instructions:

Order Summary

Est. Total $433.92

Have a promo code?

We accept: all major CCs, POs